E14e - Semiconductor Diodes

Lab Group 6: Mohammed Zulasheer (3732256), Jordan Grey (3797129)

May 14, 2025

Abstract

Investigation of the Si-diode, Zener-diode (SZX21 series) and red LED was conducted by recording their current–voltage characteristics and applying both non-linear and linear fitting methods. A non-linear fit of the logarithmic Shockley equation to the Si-diode data yielded an excellent coefficient of determination, $r^2 = 0.9982$, with an emission coefficient $n = (2.209 \pm 0.001)$(slightly above the expected value of ≈ 2) and a saturation current $I_s = (25.609 \pm 0.158)$nA, consistent with low-current behavior in the blocking region. In the reverse-bias region of the Zener-diode, a linear approximation produced a Zener voltage $V_Z = (6.491 \pm 0.129)$V, lying within the manufacturing range of (5.8–7.2)V, a direct resistance $R = (1735.135 \pm 32.222)\Omega$, and a differential resistance $r_d = (6.850 \pm 0.090)\Omega$was also determined. For the forward-bias LED, a linear fit to the I–U curve achieved $r^2 = 0.9975$and yielded a threshold voltage $V_{\mathrm{Th}} = (1.746 \pm 0.044)$V, slightly below the typical 1.8 V for red LEDs. The emitted wavelength was determined to be $\lambda = (710.282 \pm 18.081)$nm, which falls within the red region of the visible spectrum. Additionally, the voltage-dependent junction capacitance of a silicon power diode was investigated using a resonance-based measurement technique. By measuring the resonance frequency of an LC circuit at various reverse bias voltages, the total capacitance of the diode was determined. Nonlinear regression using the model $C_{\mathrm{tot}}(U) = C_G + C_0\sqrt{U_D/(U_D - U)}$ yielded the physical parameters of the diode: the parasitic capacitance $C_G = (72.88 \pm 2.75)$ pF, the zero-bias depletion capacitance $C_0 = (1183 \pm 9.22)$ pF, and the diffusion potential $U_D = (0.669 \pm 0.02)$ V. The high coefficient of determination ($r^2 = 0.99975$) confirmed excellent agreement between the model and the data. Using the extracted parameters, the depletion-layer width $d_S(U)$ was calculated and plotted as a function of reverse bias, showing the expected square-root increase. The depletion width at zero bias was found to be $d_0 = (2.21 \pm 0.017)\,\mu$m, consistent with a moderately doped silicon junction. The experiment successfully verified theoretical predictions and demonstrated the effectiveness of the resonance method for characterizing diode capacitance.

1 Introduction

Semiconductor Diodes are fundamental to almost all modern technological appliances; voltage regulation and rectification in electrical appliances, the function of transistors and the emission of light from an LED. Fundamentally Semiconductor Diodes rely on pn-junctions of n-type and p-type semiconducting materials Fig.1.1. The n-type semiconducting material contains an excess of electrons and the p-type a lack of electrons, commonly referred to as holes. At the junction of these two materials the difference creates an area with potential gradient,(diffusion potential), between the two called the depletion layer Fig.1.2. when current flows in the n-type (cathode) to the p-type (anode) direction the depletion layer and associated diffusion potential act as a potential barrier for the current, providing a resistance which results in the characteristic function of a Diode's one-way nature.

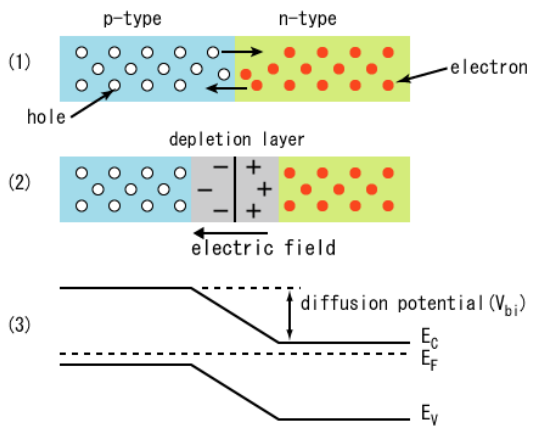

Figure 1: pn-junction Diagram: (1) p-type, n-type initial contact, (2) formation of pn-junction depletion layer, (3) characteristic potential of a pn-junction

Source: [1]

For a typical semiconductor diode the flow of current is categorized based on either the diode is in a Forward or Reverse Bias orientation. Forward bias occurs when the flow of current is from the diodes anode to cathode the resistance in the diode is very low and allows most current to pass, indicated by the Forward Current region in Fig.2 and a negative diffusion potential V_{bi} from p-type (anode) to n-type (cathode) in Fig.1.3.
In the opposite orientation, Reverse Bias, the flow of current experiences a very high resistance due and the resulting current flow is minimal, indicated by the relatively flat line across the horizontal axis, this is region is not completely zero, indicating a small leakage current, *relatively negligible in most cases*, that does pass the diode. Fig.2 indicates that beyond a certain breakdown voltage V_Z there is a sharp increase in reverse bias current, this results from a current with a sufficient enough voltage that is able to overcome the diffusion potential and cross the diminishing depletion layer, supplying a reverse bias current across the diode.

This experiment examines the current-voltage I-U characteristics of three types of diode: a silicon Si-Diode, a Zener-Diode and a Light-Emitting Diode (LED). Through these I-U characteristics quantitative insights of electrical and capacitative properties such as breakdown and thresh-

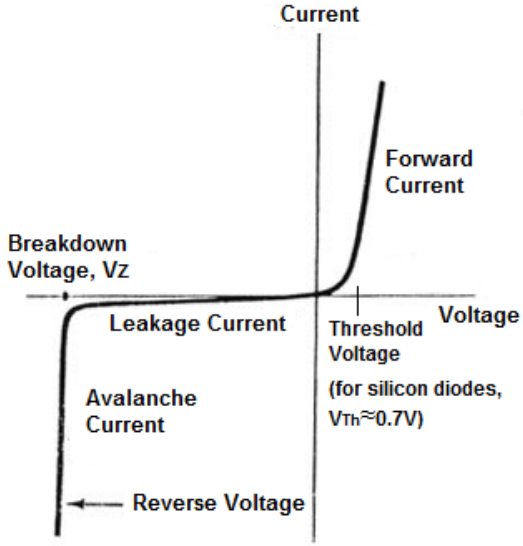

Figure 2: I-U characteristic curve for a typical semiconductor diode

Source: [5]

old voltage, emission coefficient, LED photoelectron emission and voltage-dependent capacitance of the depletion layer can be determined, in a effort to investigate importance of Diodes in electronics and circuit design.
Later on, the junction capacitance of a Silicon power diode with changing voltage at resonance will also be studied. This capacitance of a pn-diode arises from the depletion region that forms at the interface between p-type and n-type semiconductors. This region is devoid of mobile charge carriers and behaves like the dielectric of a parallel-plate capacitor, with its width depending on the applied voltage. When a reverse bias is applied across the junction, the depletion layer widens, resulting in a decrease in capacitance. The relationship between junction capacitance and reverse bias voltage is inherently nonlinear and is governed by the properties of the semiconductor material and the doping concentrations on both sides of the junction. These characteristics are essential in understanding the dynamic behavior of diodes in AC circuits, as well as in designing devices such as varactor diodes and high-frequency rectifiers. The analysis of this voltage-dependent capacitance offers direct insight into the internal electric field distribution and charge storage mechanisms within semiconductor junctions.

2 Theoretical Analysis

2.1 Si-Diode Emission Coefficient

The characteristic I-U curve Fig.2. can be modeled with Shockley's Equation:

$$I_D = I_s\left(e^{\frac{U_D\ e}{nk_BT}} - 1\right) \tag{1}$$

Where:

I_D :	Current across the diode (A)
V_D :	Voltage across the diode (V)
I_s :	Saturation Current (A)
n :	Emission Coefficient
$\frac{e}{k_BT}$:	Thermal Voltage (V) $\approx$ 26meV

Due to the presence of an exponential, this report will utilize Shockley equation in it's logarithmic form to model with experimental data to determine the emission coefficient n, for the Si-Diode.

$$\log I_D = \log\left(e^{\frac{U_D e}{nk_BT}} - 1\right) + \log I_s \tag{2}$$

For a typical Si-Diode the Emission Coefficient are $n \approx 2$ [4].

2.2 Zener-Diode Breakdown Voltage and Resistance

Fig.2. shows that the I-U relation is approximately linear in both the Breakdown and Forward Current regions. As a result, a linear fit within these regions is a good approximate for the relationship between current and voltage.

$$I_{\text{linear}}(U) \approx mU_{\text{linear}} + b : U_{\text{linear}} \in \text{Breakdown/Forward Region} \tag{3}$$

From this approximation the Breakdown Voltage V_Z of the Zener-Diode which is determined to be at approximately $0.2I_{\text{Z,max}}$ of the I-U Curve, is simply:

$$V_Z \approx \frac{0.2I_{\text{Z,max}} - b}{m} \tag{4}$$

Using Ohm's Law and its differential:

$$R = \frac{U}{I} : dR = \frac{dU}{dI} \tag{5}$$

The direct resistance and its differential resistance at the point V_Z is:

$$R = \frac{V_Z}{I(V_Z)} \quad \& \quad r_d = \frac{dU}{dI} = \frac{1}{|m|} \tag{6}$$

Given a linear fit is used r_d is constant, so the inverse of the linear gradient m is sufficient.

Typical Breakdown voltage range for the SZX21 series zener diode used in this investigation is $(5.8 - 7.2)$V [6], typical values for R and r_d were unable to determined.

2.3 LED Threshold Voltage and Wavelength Emission

Using the same approximation as for the Breakdown Voltage Eq.(3). can be used and using y-intercept of the model the Threshold Voltage, V_{Th} is determined as:

$$V_Z \approx \frac{-b}{m} \tag{7}$$

To find the wavelength emission λ_e it was first assumed that the electrons and/or holes emit the energy gained by V_{Th}, as such $E = hv = eV_{\text{Th}}$ and $c = \lambda v$, then:

$$\lambda \approx \frac{hc}{eV_{\text{Th}}} \tag{8}$$

2.4 Voltage-Dependent Capacitance of a pn-Junction

The capacitance of a pn-junction diode under reverse bias arises from the depletion region, a space-charge zone formed at the interface of p- and n-doped semiconductor regions. When a reverse voltage is applied across the junction, the depletion region widens, reducing the diode's capacitance. This results in a voltage-dependent capacitance, commonly referred to as the junction capacitance. In equilibrium, electrons from the n-region diffuse into the p-region and recombine with holes, creating a depletion zone void of mobile carriers. The resulting space-charge regions develop fixed ionized donor and acceptor charges on either side of the junction. An internal electric field builds up, halting further diffusion. This region behaves like a dielectric in a parallel-plate capacitor.
When an external reverse bias U is applied, the depletion region expands, and the total capacitance decreases. The depletion-layer capacitance C_S can be expressed as:

$$C_S(U) = \frac{\varepsilon_r \varepsilon_0 A}{d_S(U)}$$

Where:

ε_r :	Relative permittivity
ε_0 :	Vacuum permittivity
A :	Junction area,
$d_S(U)$:	Depletion width as a function of applied voltage

Using Poisson's equation and the abrupt junction approximation, one obtains the depletion width as:

$$d_S(U) = \sqrt{\frac{2\varepsilon_r \varepsilon_0}{e} \cdot \frac{n_A + n_D}{n_A n_D} \cdot (U_D - U)}$$

This leads to the voltage-dependent depletion-layer capacitance:

$$C_S(U) = C_0 \sqrt{\frac{U_D}{U_D - U}}$$

Where:

$C_0 = C_S(U = 0)$:	Capacitance at zero bias,
U_D :	Built-in diffusion potential of the junction,
$U < 0$:	Applied reverse bias voltage.

In practice, the measured capacitance also includes a voltage-independent parasitic capacitance C_G due to the diode housing and measurement setup. Thus, the total capacitance is modeled as:

$$C_{\text{tot}}(U) = C_G + C_0 \sqrt{\frac{U_D}{U_D - U}} \tag{9}$$

This expression was used to perform nonlinear regression on the experimental data.
The capacitance C_{tot} was determined using the resonance condition in an LC circuit:

$$f = \frac{1}{2\pi\sqrt{LC_{\text{tot}}}} \quad \Rightarrow \quad C_{\text{tot}} = \frac{1}{(2\pi f)^2 L} \tag{10}$$

Here:

f :	Measured resonance frequency,
L :	Known inductance in the circuit.

This allowed us to obtain capacitance values for a range of reverse voltages and fit them to the theoretical model above.
By determining $C_S(U) = C_{tot}(U) - C_G$, we compute the depletion width using the parallel-plate formula:

$$d_S(U) = \frac{\varepsilon_r \varepsilon_0 A}{C_S(U)} \tag{11}$$

At zero bias, this expression gives the depletion-layer thickness d_0 directly from the fitted C_0.

3 Experimental Analysis

Experimental Setup for 3.1-3.4

For consistent and comparable measurements a circuit was setup as shown in Fig.3. and for each the Si-Diode, Zener-Diode, Reverse-Bias Zener-Diode(*Flipped Orientation*) and LED. A minimum of 20 data points was collected, ranging from 1mA to 20mA, using LabVIEW circuit measurement software. Additionally a red LED was used.

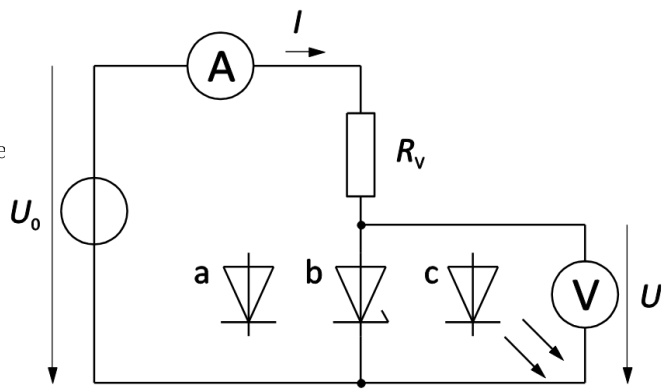

Figure 3: Circuit for the measurement of I-U characteristics of a Si-Diode, Zener-Diode, Reverse-Bias Zener-Diode and LED

Source: [7]

Typical Threshold Voltages for a red LED are ≈ 1.8V [2].

3.1 I-U Characteristic Diagrams
(Task I)

The experimental results show that the Forward-Bias of the Si-Diode and Zener-Diode are largely similar, whilst the Forward-Bias of the LED has a different Threshold Voltage, located a significantly distant beyond typical diode values of $V_{\text{Th}} \approx 0.7V$ and a significantly smaller current $I(U)$ across the Diode. When comparing the results of the Forward-Bias Zener and Reverse-Bias Zener-Diode I-U characteristics, an idea of the complete I-U characteristic can be made, with the blocking region,*region between the breakdown voltage and the threshold voltage, see Fig.1.*, is approximately spans $(-6.9$ to $0.5)$ volts. A normalized I-U curve for each diode Fig.5. conveys the differences in gradients of the differing Diodes. It can be seen that although Si-Diode and the Zener-Diode characteristics display the same general trend the Zener-Diode has a weaker gradient than

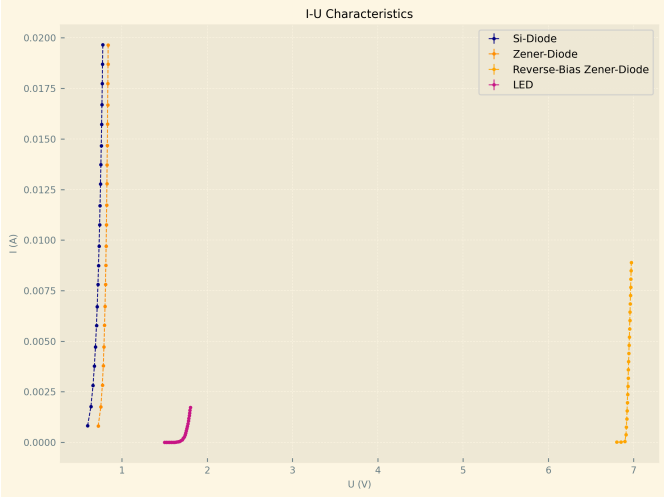

Figure 4: Experimental I-U Curve for each Diode investigated

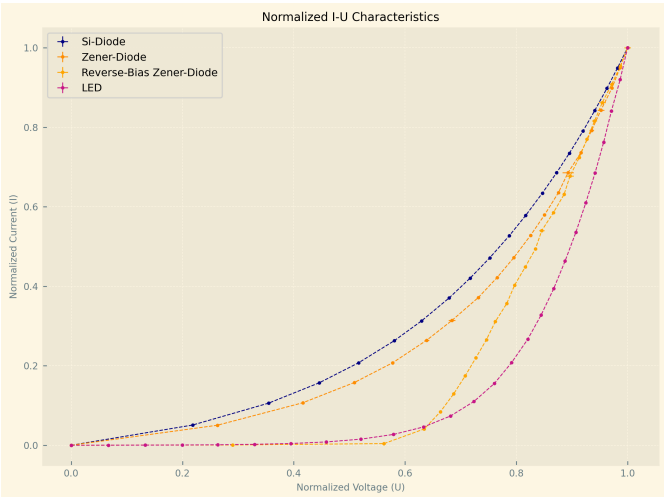

Figure 5: Normalized I-U Curve for each Diode investigated

that of the Si-Diode.

The Reverse-Bias Zener-Diode as a clear and distinct disparity between the blocking region of (0.0 - 0.55 $U_{\text{Normalized}}$) with $\approx 0\mu A$ and the beginning of the breakdown region (0.65-1.0 $U_{\text{Normalized}}$) with a transition region of approximately (0.55 - 0.65 $U_{\text{Normalized}}$).In comparison the LED has a large transition region. The current within the breakdown region of the Reverse-Bias Zener-Diode is largely linear, when accounting for experimental error. (0.4-0.91 $U_{\text{Normalized}}$)

3.2 Si-Diode
(Task II.1)

3.2.1 Monte Carlo Uncertainty Propagation

Experimental data was collected with a sample size of $n = 3$ for each data point and as a result recorded current and voltage measurements had an associated standard error. When performing a non-linear fit of experimental data to Eq.(2). traditional methods of uncertainty propagation proved difficult to obtain a reliable uncertainty, particularly when considering that the error collected was a standard error. Thus, a Monte Carlo approach for error propagation[3], was deemed the most appropriate method for uncertainty propagation.

The Monte Carlo simulation consisted of $n_{\text{iter}} = 1000$ iterations, in each iteration the measured voltage U(v) was perturbed by adding normally distributed noise with a mean of 0 and a standard deviation equal to the standard error of the respective data point.

$$(U_{perturbed} = U_{exp} + np.random.normal(0,\ S(U_{exp}))).$$

The Eq.(2) was then fitted to the logarithmic current and voltage, taking in to consideration the experimental standard error of I(U) collected for each data point, to estimate the emission coefficient n and saturation current I_s with associated uncertainty.

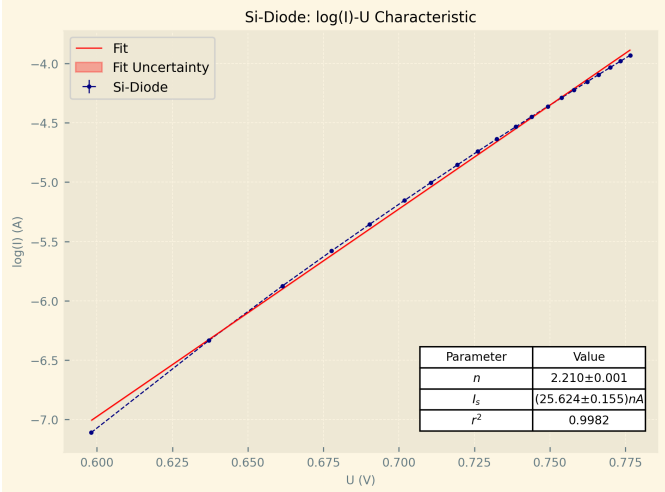

Figure 6: Log(I(U)) Shockley Eq.2. for Si-Diode with non-linear fit and Monte Carlo Simulated Uncertainty

Fig.6. displays the modeled Eq.2 to log-transformed experimental data and the determined parameters. Despite employing an appropriate uncertainty propagation method. the propagated uncertainty in the linear fit is quite small because of an initial small uncertainty, $\approx 10^{-6}V$ and a subsequent log-transformation.

Through non-linear regression the emission coefficient was determined to be n =(2.209 $\pm$ 0.001) and the saturation current I_s = (25.609 $\pm$ 0.158)nA, that strongly correlated with experimental data $r^2 = 0.9982$.

3.3 Zener-Diode
(Task II.2)

The approximate linear region for the I-U characteristic of the Reverse-Bias Zener-Diode was determined to beyond and including 6.929V.

A linear analysis of the determined linear region resulted in a strong linear correlation with experimental data, $r^2 = 0.9967$. From the fitted parameters, the Breakdown Voltage was determined to be V_Z = (6.491 $\pm$ 0.129)V, the direct resistance, R = (1735.135 $\pm$ 32.222)Ω and differential resistance, r_d = (6.850 $\pm$ 0.090)Ω. the direct resistance for R which supports the concept of high resistance in the Reverse-Bias orientation of the Zener-Diode.

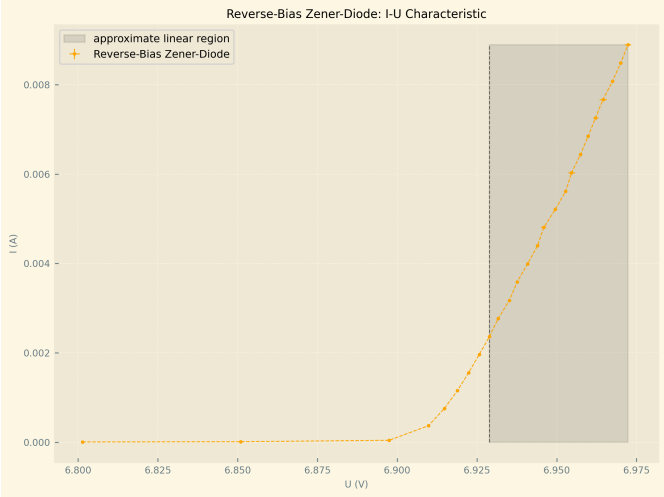

Figure 7: I-U Curve for Reverse-Bias Zener Diode, with annotated approximate linear region

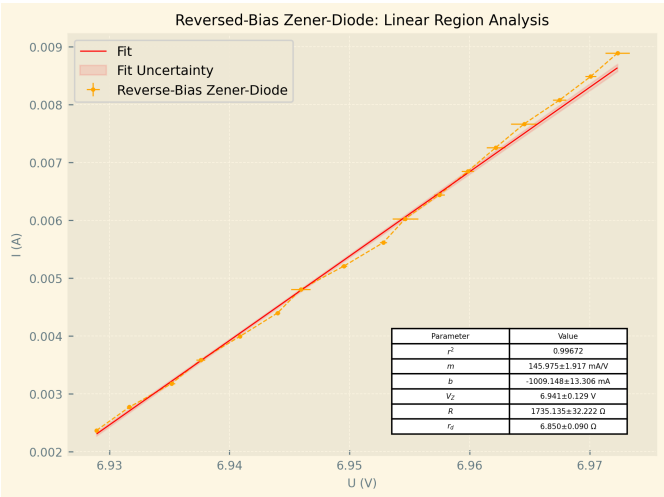

Figure 8: Analysis of approximate linear region of Reverse-Bias Zener-Diode with determined parameters

3.4 Light-Emitting-Diode
(Task II.3)

The LED used in the experimental method as outlined in Section:3. was red in color.

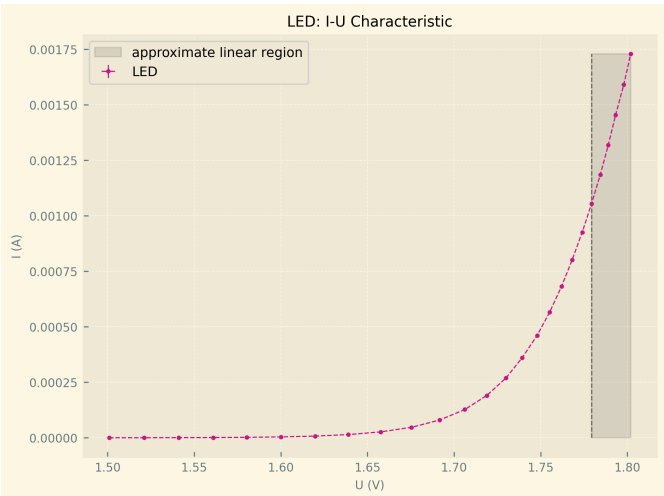

Figure 9: I-U Curve for LED, with annotated approximate linear region

The approximate linear region for the I-U characteristic of the LED was determined to beyond and including 1.779V.

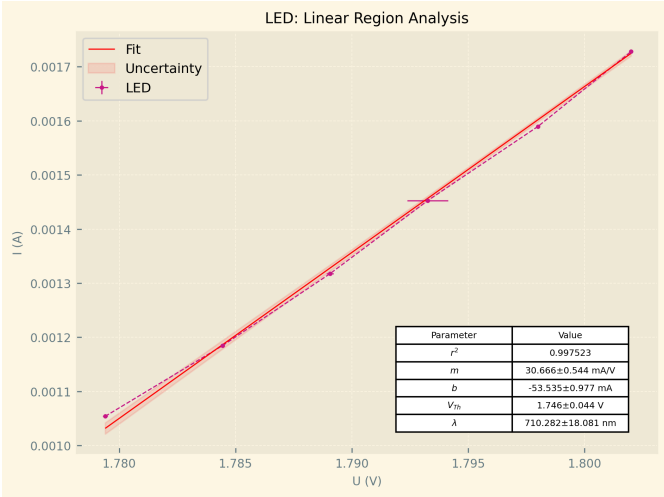

Figure 10: Analysis of approximate linear region of LED with determined parameters

From the linear analysis performed on linear-region of the experimental data, a strong linear correlation was observed $r = 0.9975$, with fitted parameters of $m = (30.666 \pm 0.544)\frac{mA}{V}$ and $b = (-53.535 \pm 0.977)$mA. From these results a Threshold Voltage of $V_{\text{Th}} = (1.746 \pm 0.044)$V and emitted wavelength of $\lambda = (710.282 \pm 18.081)$nm, coinciding with experimental observation of a red light.

Experimental Setup for 3.5

The experimental setup followed the schematic shown in Fig.11. It consisted of a high-Q resonant LC circuit, which included an inductor with a known inductance of $L = 229mH$, as well as a silicon power diode (SY180) mounted in reverse bias configuration. Additional circuit components included a series resistor of $R_V = 1k\Omega$, a damping resistor $R_M = 100\Omega$ and a capacitor of $C = 2\mu F$ as a protective AC-coupling element that ensures the function generator sees only the tiny sinusoidal voltage it is meant to deliver.

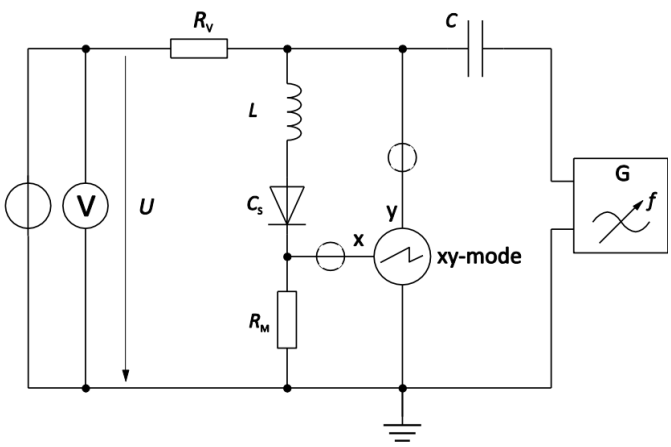

Figure 11: Circuit for the determination of the depletion-layer capacitance using the resonance technique

Source: [7]

The junction capacitance of the silicon diode was measured as a function of reverse bias voltage using a resonance method. The resonance frequency was determined

at each voltage by observing Lissajous figures on a two-channel oscilloscope; the frequency at which the figure became a straight line indicated resonance.
Measurements were taken across a voltage range of $-0.5\,\mathrm{V}$ to $-30\,\mathrm{V}$. For each reverse voltage, the total capacitance was calculated using the resonance condition provided by Eq.(10):
This total capacitance includes both the depletion-layer capacitance $C_S(U)$ and a constant parasitic component C_G. A nonlinear fit of the data to the model was performed using Eq.(9) to extract the physical parameters C_G, C_0, and U_D. Using the obtained value C_G the relation $C_S(U) = C_{tot}(U) - C_G$ and Eq.(11). the depletion width was obtained and plotted against the voltage.

3.5 Si Power Diode
(Task III)

The measured total capacitance C_{tot} of the reverse-biased Si diode showed a clear decreasing trend with increasing reverse voltage, as sown in Fig.12, in agreement with the expected behavior of a widening depletion region. The data was fitted using the theoretical model provided by Eq.(9)

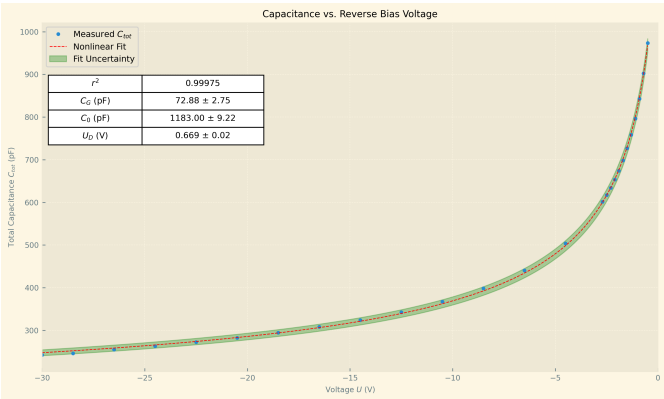

Figure 12: Total Capacitance vs. Voltage of a Silicon Power Diode

From nonlinear regression, the extracted parameters were $C_G = (72.88 \pm 2.75)\,\mathrm{pF}$, $C_0 = (1183.00 \pm 9.22)\,\mathrm{pF}$, and $U_D = (0.669 \pm 0.02)\,\mathrm{V}$, with an excellent coefficient of determination $r^2 = 0.99975$. This confirms that the theoretical model accurately describes the experimental data. The fitted value of the diffusion potential $U_D = (0.669 \pm 0.02)\,\mathrm{V}$ is consistent with the theoretical expectations for silicon pn-junctions, which typically fall within the range of 0.6–0.7V at room temperature. This value can be derived from the equation:

$$U_D = \frac{kT}{e} \ln\left(\frac{n_D n_A}{n_i^2}\right)$$

where $\frac{kT}{e} \approx 25.9\,\mathrm{mV}$ at 300 K, and with doping concentrations $n_D, n_A \sim 10^{16} - 10^{18}\,\mathrm{cm}^{-3}$, one obtains $U_D \in [0.5, 0.8]\,\mathrm{V}$. This aligns well with values found in standard literature such as *S.M. Sze, Physics of Semiconductor Devices (3rd Ed., Chapter 2)*.
The fitted zero-bias depletion capacitance $C_0 = (1183.00 \pm 9.22)\,\mathrm{pF}$ and also lies within the expected range for power diodes. Using the parallel-plate model:

$$C_0 = \frac{\varepsilon_r \varepsilon_0 A}{d_0}$$

and the known parameters $\varepsilon_r = 11.8$, $A = 25\,\mathrm{mm}^2$, and $\varepsilon_0 = 8.854 \times 10^{-12}\,\mathrm{F/m}$, this corresponds to a depletion width $d_0 \approx 2.2\,\mu\mathrm{m}$, which is physically reasonable for moderately doped junctions. Finally, the extracted parasitic capacitance $C_G = (72.88 \pm 2.75)\,\mathrm{pF}$ is in the typical range for geometric and packaging effects in discrete diodes and measurement setups.
No significant discrepancies were observed between the model and data. Minor deviations at low voltages may be attributed to measurement resolution limits in determining the resonance frequency from Lissajous figures. Overall, the results validate the theoretical dependence of junction capacitance on bias voltage and demonstrate the precision of the resonance technique for capacitance measurements.
Using the value of parameter C_G and Eq.(11), a plot of $d_s(U)$ vs. U was made to illustrate the functional dependence of the depletion region width on the reverse bias voltage.

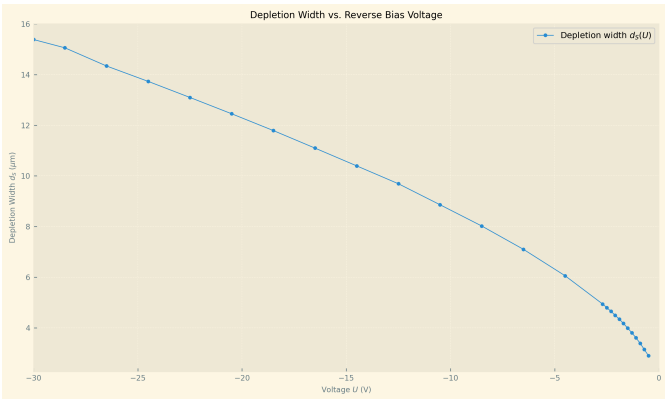

Figure 13: Depletion-layer Thickness vs. Voltage of a Silicon Power Diode

As expected, the plot shows a nonlinear increase in d_S with increasing reverse bias, following a square-root dependence of the form:

$$d_S(U) \propto \sqrt{U_D - U}$$

This behavior is characteristic of an abrupt junction and confirms the physical basis of the model. The zero-bias depletion width was found to be:

$$d_0 = \frac{\varepsilon_r \varepsilon_0 A}{C_0} = (2.21 \pm 0.017)\,\mu\mathrm{m}$$

which is within the expected range for a moderately doped silicon diode. Both the capacitance and the depletion width results are consistent with standard semiconductor physics and confirm the theoretical relationships.

4 Discussion

The results of the experimental investigation into the Si-Diode, Zener-Diode and LED yielded results that were largely approx to but significantly distinct from literature findings when considering uncertainty values. Highlighting the failings of the linear approximations and approximations in equations such as Eq.(8).

The non-linear fitting of the logarithmic Shockley's equation resulted in a r^2 =0.9982 and modeled the

experimental data with a high degree of precision. the emission coefficient n =(2.209 ± 0.001) determined for the Si-Diode is slightly above the expected value of $n \approx 2$ [4], suggesting additional factors such as resistance in the wire that weren't considers resulting in the 0.209 difference. The saturation current I_s =(25.609 ± 0.158)nA aligns with the low I_s value expected within the blocking region of the Si-Diode's I-U characteristic Curve Fig.2., Fig.4. The Monte Carlo uncertainty propagation method effectively handled the non-linear and logarithmic transformation of uncertainty.

The linear approximation of the Breakdown region for the Reverse-Bias Zener-Diode measurements is suspected to be the main cause of any deviation in accuracy of the results in V_Z,R and r_d, however V_Z =(6.491 ± 0.129)V still lies within the SZX21 series' literature range of 5.8 − 7.2V [6], suggesting a maintained degree of accuracy. The direct resistance R =(1735.135 ± 32.222)Ω agrees with theoretical predictions of a high Reverse-Bias resistance, with a differential resistance of r_d = (6.850 ± 0.090)Ω.

The linear approximation of the Forward region for the LED's I-U characteristic curve is also predicted to be the main source of any deviations from expected results, although the linear fit to this approximation has a r^2 = 0.9975 suggesting a good linear fit with results. From the linear fit V_{Th} =(1.746 ± 0.044)V, which is below the expected value of ≈ 1.8V for a red LED. Although the determined emitted wavelength λ = (710.282 ± 18.081)nm is within the red range of visible light, however deviation from the traditional range of (650 - 700)nm. This deviation is associated with a combination of the determined V_{Th} which was below expected values and additional factors that were not considered, such as energy loss within the LED.

The results of the non-linear regression of the Si power diode total capacitance vs. voltage demonstrate that the depletion-layer capacitance of a silicon power diode exhibits the expected nonlinear dependence on reverse bias voltage. The experimental data closely followed the theoretical model, and the fitted parameters were physically reasonable. In particular, the extracted diffusion potential of approximately $0.67V$ matches the known values for silicon junctions at room temperature, and the capacitance values correspond well to the geometry of the diode used. The high r^2 value of 0.99975 indicates excellent agreement between theory and experiment, confirming the reliability of the resonance method and the accuracy of the Lissajous technique for detecting resonance. The functional form of the $d_S(U)$ plot, which increases as $\sqrt{U_D - U}$, reflects the physics of the space-charge region under the abrupt junction approximation. No major discrepancies were observed, and any small deviations at low voltages can be attributed to the limited resolution in identifying the exact resonance frequency or minor experimental uncertainties. Overall, the experiment successfully verified the theoretical prediction of voltage-dependent capacitance in a reverse-biased pn-junction and demonstrated the effectiveness of using resonance techniques to characterize such behavior.

5 Conclusion

This investigation into semiconductor; Si-Diode, Zener-Diode and LED showed an overall agreement with literature values, but highlighted systematic deviation due to linear approximations and factors and effects that were not considered such as energy loss. For the Si-Diode, fitting Shockley's equation yielded r^2 = 0.9982, an emission coefficient n =(2.209 ± 0.001) (vs. the ideal ≈ 2) and a saturation current I_s = (25.609 ± 0.158)nA, the discrepancies likely arising from unmodeled internal resistances and unaccounted for factors. The Zener-Diode's breakdown voltage V_Z = (6.491 ± 0.129)V V remains within the SZX21 series' (5.8–7.2)V literature value, while its static resistance R =(1735.135 ± 32.222)Ω and differential resistance r_d =(6.850 ± 0.090)Ω agree with high-resistance expectations. The LED's forward-region fit gave r^2 = 0.9975, threshold V_{Th} = (1.746 ± 0.044)V and emission wavelength λ =(710.282 ± 18.081)nm, the wavelength varied from traditional red wavelength range of (650 − 700)nm due to unaccounted energy losses within the LED. Later, the junction capacitance of a reverse-biased silicon power diode was investigated using a resonance technique. The measured resonance frequencies were used to compute the total capacitance of the diode at various voltages, from which the voltage-dependent depletion-layer capacitance and the depletion width were extracted.

The experimental data showed excellent agreement with the theoretical model described by Eq.(9). Nonlinear regression yielded physically reasonable values for the fitted parameters: C_G = (72.88 ± 2.75) pF, C_0 = (1183.00 ± 9.22) pF, and U_D = (0.669 ± 0.02) V, with a very high coefficient of determination (r^2 = 0.99975). These values are in good agreement with expected properties of silicon diodes and confirm the accuracy of the resonance-based measurement method. Using the extracted C_0, the depletion width at zero bias was calculated asd_0 = 2.21 ± 0.017 μm. This value is consistent with typical depletion widths in moderately doped pn-junctions. Furthermore, the plot of $d_S(U)$ vs. U showed the expected square-root increase in depletion width with more negative bias, confirming the theoretical prediction that $d_S(U) \propto \sqrt{U_D - U}$. The experiment successfully verified the voltage dependence of the junction capacitance and depletion width in a silicon diode. The results support the abrupt junction approximation and demonstrate the precision and reliability of the resonance technique for measuring small capacitance in semiconductor devices.

References

[1] Anon. PN Junction Diagram. https://commons.wikimedia.org/wiki/File:PnJunction-E.PNG, 2011. Accessed: 2025-05-11.

[2] Electronics-Tutorials.ws. The light emitting diode. https://www.electronics-tutorials.ws/diode/diode_8.html, 2013. URL https://www.electronics-tutorials.ws/diode/diode_8.html. Accessed: 2025-05-12.

[3] G. H. Gardenier, F. Gui, and J. N. Demas. Error propagation made easy—or at least easier. *Journal of Chemical Education*, 88(7):916–920, 2011. doi: 10.1021/ed1004307. URL https://doi.org/10.1021/ed1004307.

[4] LibreTexts. 3: Ideal diode equation. https://eng.libretexts.org/Bookshelves/Materials_Science/Supplemental_Modules_(Materials_Science)/Solar_Basics/D._P-N_Junction_Diodes/3%3A_Ideal_Diode_Equation, 2020. URL https://eng.libretexts.org/Bookshelves/Materials_Science/Supplemental_Modules_(Materials_Science)/Solar_Basics/D._P-N_Junction_Diodes/3%3A_Ideal_Diode_Equation. Accessed: 2025-05-12.

[5] Mini Physics. I/v graph of a semiconductor diode. https://www.miniphysics.com/iv-graph-of-semiconductor-diode.html, 2010. URL https://www.miniphysics.com/iv-graph-of-semiconductor-diode.html. Accessed: 2025-05-12.

[6] RFT. Szx21 zener diode datasheet. https://www.575.de/images/content/Datenblatt/SZX21.pdf, 1976. URL https://www.575.de/images/content/Datenblatt/SZX21.pdf. Accessed: 2025-05-12.

[7] M. Ziese. *E14e Semiconductor Diodes*. Universität Leipzig, May 2025.